FHC®
FRAMELESS HARDWARE COMPANY
THE GLAZING SUPPLY COMPANY
EXPERIENCE AND INNOVATION

FHC P2 Series
Rim Panic Exit Device with Cylinder
"C" Strike" Installation Instructions

FHC P2 Series "C" Strike Mounting Instructions

MOUNTING INSTRUCTIONS:

1. PREPARE LOCK STILE PER TEMPLATE NO. 10-935 DRILL CYLINDER MOUNTING HOLES IF REQUIRED.
2. LOCATE CENTERLINE OF CYLINDER ON EXTERIOR OF DOOR AND DRILL IF REQUIRED.
3. TRIM TAIL PIECE TO FIT INTO PANIC DRIVE BUSHING ASSEMBLY.
4. MOUNT CYLINDER AND SECURE WITH MOUNTING SCREWS (SUPPLIED BY LOCK MFG.) IF TRIM IS REQ'D PEPARE PER 10-997 TEMPLATE. FOR INSTALLMENT OF PUSHBAR MORTISE "CYLINDER DOGGING" SEE **(DWG. 10-979 RE-KEY/CYL. INSTALLMENT INSTRUCTIONS.)**
6. LOCATE MOUNTING HOLE ON INACTIVE STILE DRILL & TAP 1/4-20 THDS. 40"(1016) FROM BTM. OF DOOR.
7. **PANIC ATTACHMENT**
   REMOVE FRONT AND REAR END BASE COVERS BY RELEASING 6-32 x 3/16(5) FLAT HD. SCREWS. SECURE ACTIVE END OF PANIC BY INSTALLING 2 EACH 12-24x1/2(13) PAN HD.M.S.
   SECURE INACTIVE END WITH SINGLE 1/4-20x1/2(13) ROUND HD. M.S. (PHIL.) WITH SEMS THROUGH INACTIVE BASE PLATE. PROCEED BY RE-INSTALLING BASE COVERS ON EACH END OF PANIC BASE.
8. TO INSTALL STRIKE LOCATE 10-24 TAPS ON ACTIVE STILE (2 PLACES).
9. MOUNT AND SECURE STRIKE. (REF. DETAIL "S")
10. CHECK OPERATION OF ALL PARTS INCLUDING CYLINDER IF BEING USED TO ASSURE PROPER OPERATION.

DOGGING INSTRUCTIONS:

TO DOG- DEPRESS BAR,INSERT KEY AND TURN CCW UNTIL IT STOPS,RETURN KEY TO ORIGINAL POSITION THEN REMOVE.

TO UNDOG-INSERT KEY AND TURN CW UNTIL IT STOPS, RETURN KEY TO ORIGINAL POSITION THEN REMOVE.

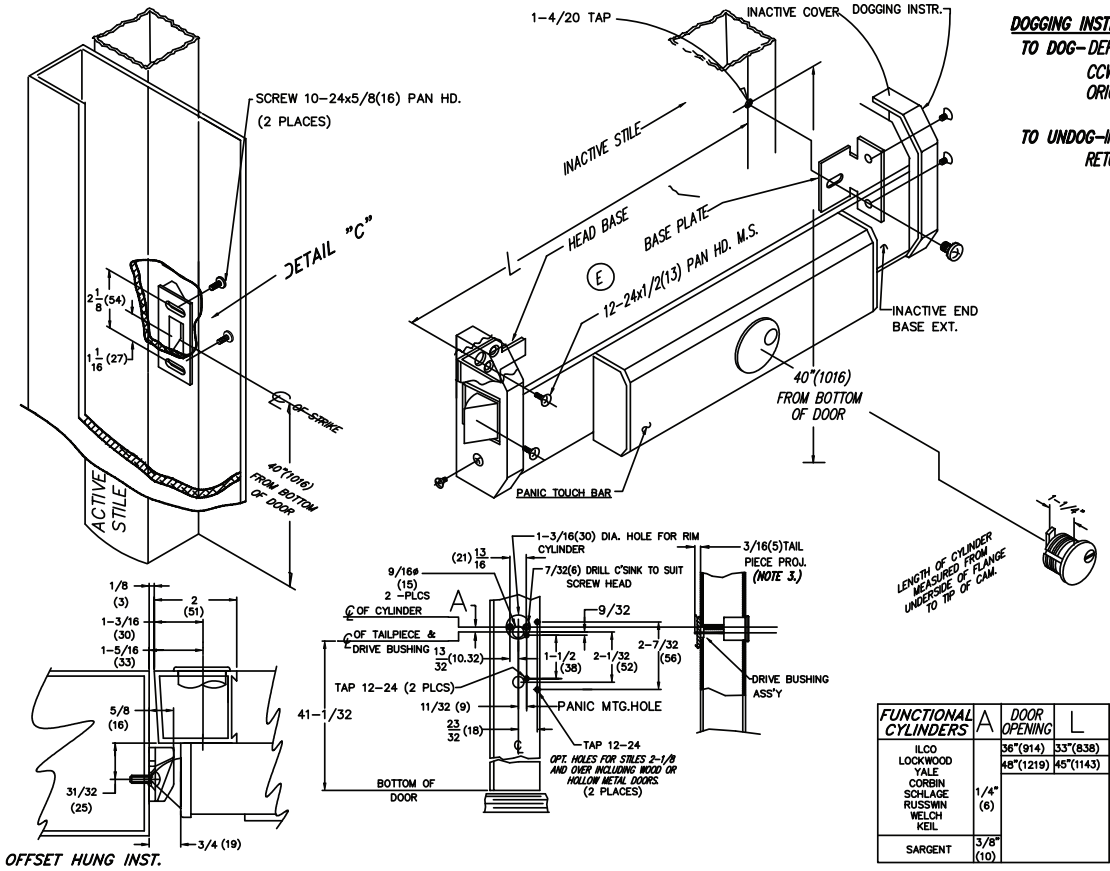

FUNCTIONAL CYLINDERS	A	DOOR OPENING	L
ILCO LOCKWOOD YALE CORBIN SCHLAGE RUSSWIN WELCH KEIL	1/4" (6)	36"(914)	33"(838)
		48"(1219)	45"(1143)
SARGENT	3/8" (10)		

FHC®
FRAMELESS HARDWARE COMPANY
4361 Firestone Blvd. South Gate, CA 90280 Toll Free: (888) 295-4531 | Fax: 323 336-8307 | Web: fhc-usa.com