FHC FRAMELESS HARDWARE COMPANY — The Glazing Supply Company

EXPERIENCE AND INNOVATION

SM50 PULL SIDE DOOR MOUNTED

SELECT THE PICTURE THAT MATCHES YOUR INSTALLATION AND FOLLOW DIRECTIONS ON THAT SIDE OF PAGE.

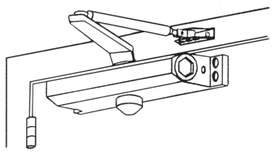

Right Hand

⚠CAUTION

IMPROPER INSTALLATION MAY RESULT IN PERSONAL INJURY OR POPERTY DAMAGE FOLLOW ALL INSTRUCTIONS CAREFULLY.

Left Hand

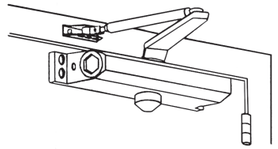

1 LOCATE PULL SIDE TEMPLATES & SEPARATE ON DOTTED LINE. 1

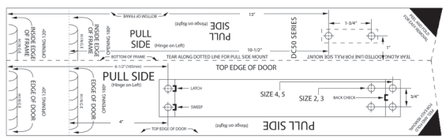

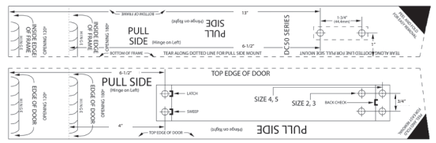

2 PEEL OFF TEMPLATES AND ALIGN WITH HINGE EDGE OF DOOR & FRAME, CENTER PUNCH TEMPLATE HOLES. 2

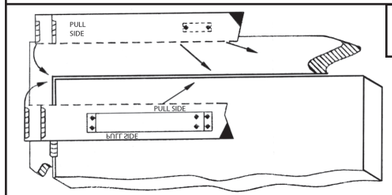

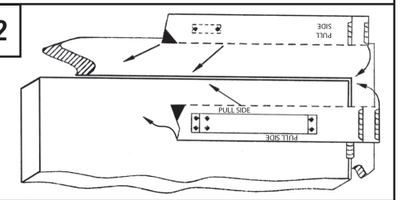

3 PEEL TEMPLATES OFF OF DOOR & FRAME. ATTACH MOUNTING BODY, ROD & SHOE. 3

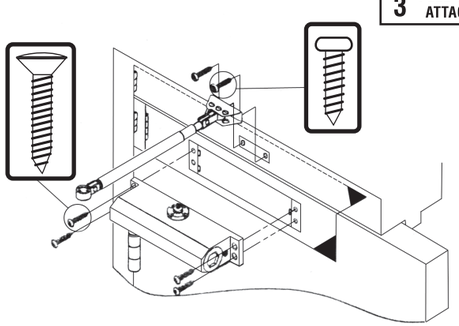

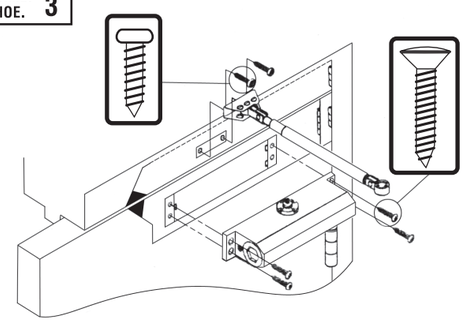

4 ATTACH MAIN ARM TO CLOSER. CONNECT ARM WITH ROD & SHOE. PRELOAD ARM TO 90° AS SHOWN. 4

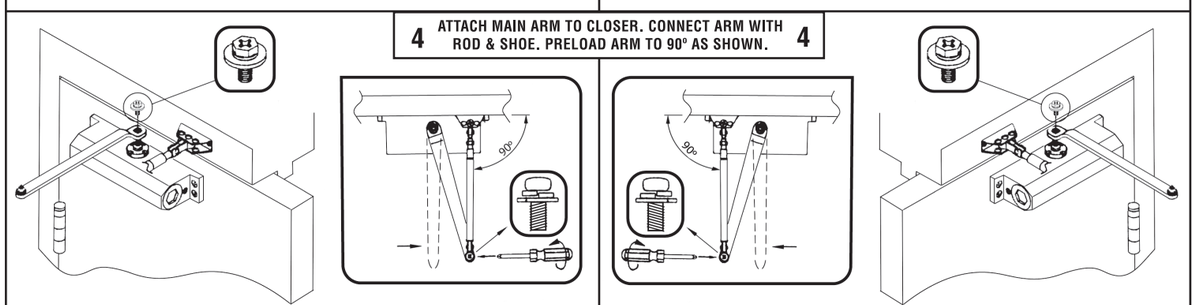

IF NECESSARY, ADJUST DOOR SPEEDS.

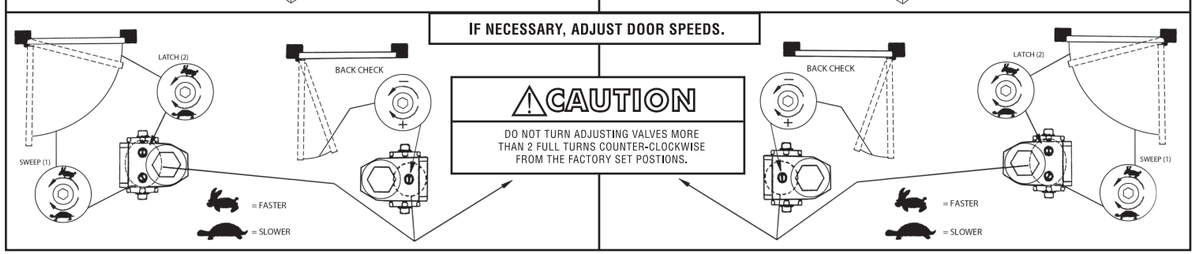

⚠CAUTION

DO NOT TURN ADJUSTING VALVES MORE THAN 2 FULL TURNS COUNTER-CLOCKWISE FROM THE FACTORY SET POSTIONS.

FHC FRAMELESS HARDWARE COMPANY — The Glazing Supply Company

EXPERIENCE AND INNOVATION

SM50 PUSH SIDE JAMB MOUNTED

SELECT THE PICTURE THAT MATCHES YOUR INSTALLATION AND FOLLOW DIRECTIONS ON THAT SIDE OF PAGE.

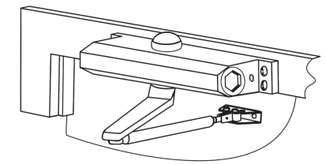

Left Hand

⚠CAUTION

IMPROPER INSTALLATION MAY RESULT IN PERSONAL INJURY OR POPERTY DAMAGE FOLLOW ALL INSTRUCTIONS CAREFULLY.

Right Hand

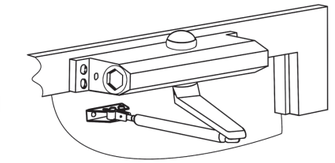

1 LOCATE PUSH SIDE TEMPLATES & SEPARATE ON DOTTED LINE. 1

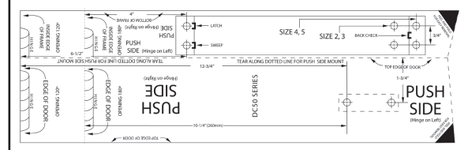

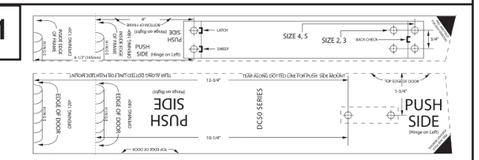

2 PEEL OFF TEMPLATES AND ALIGN WITH HINGE EDGE OF DOOR & FRAME, CENTER PUNCH TEMPLATE HOLES. 2

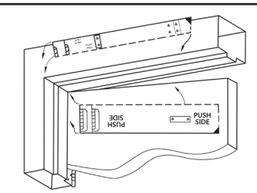

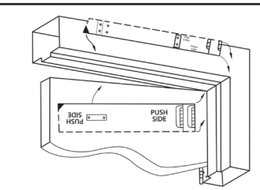

3 PEEL TEMPLATES OFF OF DOOR & FRAME. ATTACH MOUNTING BODY, ROD & SHOE. 3

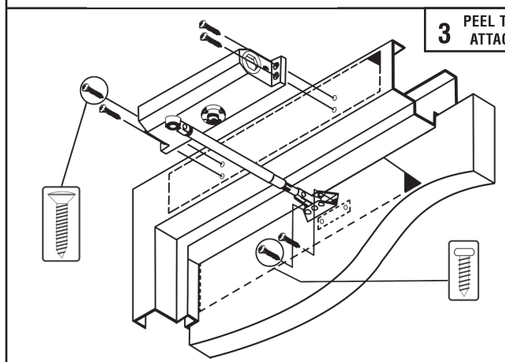

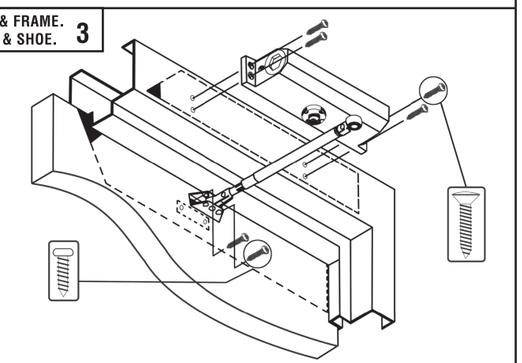

4 ATTACH MAIN ARM TO CLOSER. CONNECT ARM WITH ROD & SHOE. PRELOAD ARM TO 90° AS SHOWN. 4

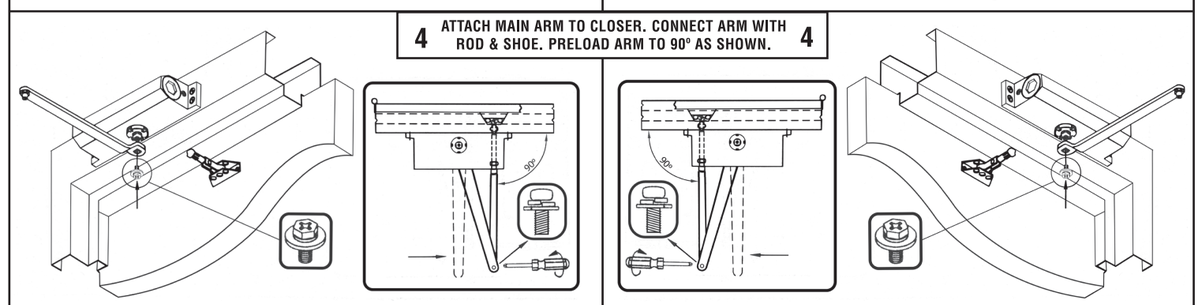

IF NECESSARY, ADJUST DOOR SPEEDS.

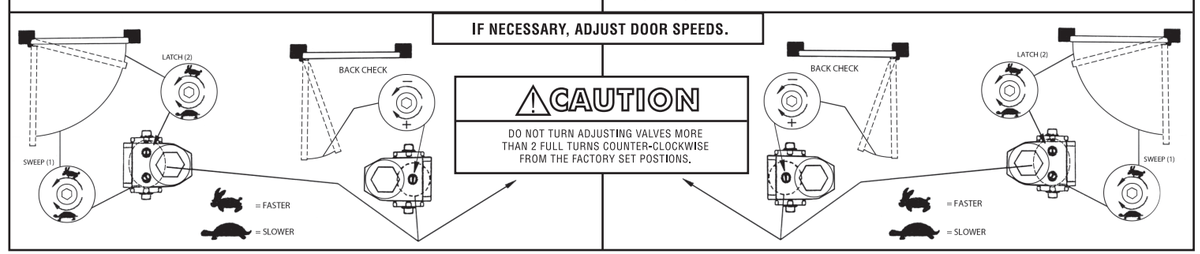

⚠CAUTION

DO NOT TURN ADJUSTING VALVES MORE THAN 2 FULL TURNS COUNTER-CLOCKWISE FROM THE FACTORY SET POSTIONS.

LIT0193 SM50 09.30.22